Safety thru-beam sensor

SLA29/73c

- Sensing range up to 30 m
- Self-monitoring (type 4 according to IEC/EN 61496-1)
- Red transmission light
- Integrated alignment aid
- Clearly visible LED functional display and pre-fault indicator on the receiver
- Sturdy housing
- Waterproof, degree of protection IP67
- Operation on SB4-series control units (SafeBox)

Dimensions

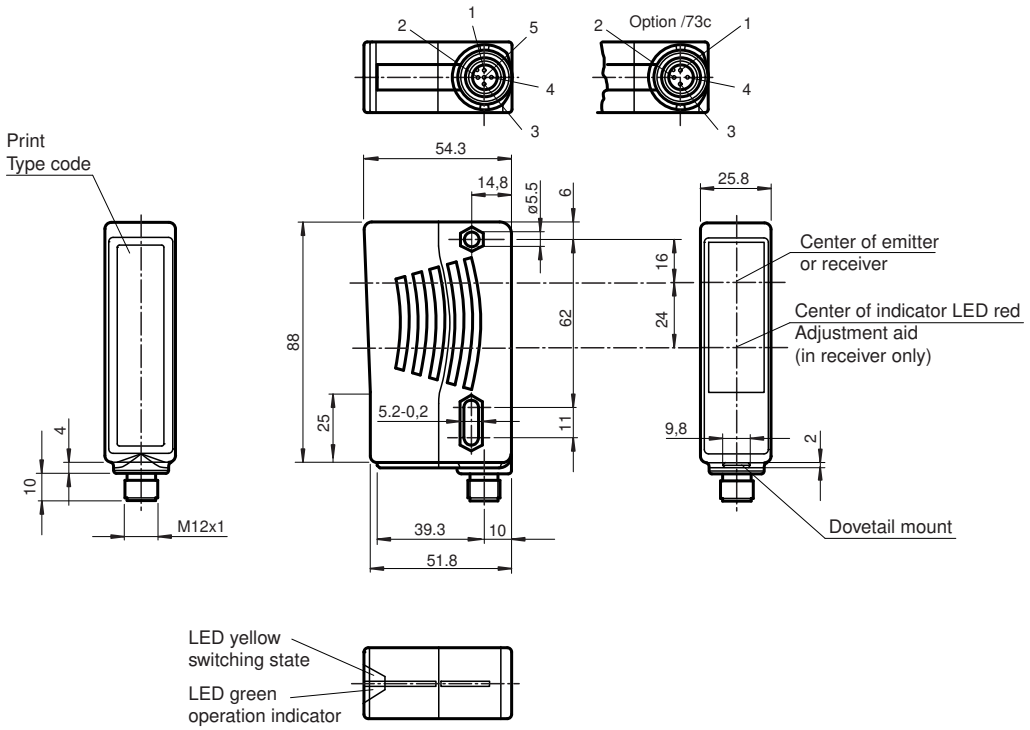

Technical Data

System components	
Emitter	SLA29-T/73c
Receiver	SLA29-R/73c
General specifications	
Effective detection range	0.2 ... 30 m
Threshold detection range	40 m
Light source	LED
Light type	modulated visible red light
Target size	static: 30 mm dynamic: 40 mm (at v = 1.6 m/s of the obstacle)

Release date: 2025-03-13 Date of issue: 2025-03-13 Filename: 118439_eng.pdf

Technical Data

Alignment aid		LED red in receiver
Opening angle		< 5 °
Functional safety related parameters		
Safety Integrity Level (SIL)		SIL 3
Performance level (PL)		PL e
Category		Cat. 4
Mission Time (T_M)		20 a
PFH_d		4.4 E-10
Type		4
Indicators/operating means		
Operation indicator		LED green
Function indicator		LED yellow: 1. LED lit constantly: signal > 2 x switching point (operating reserve) 2. LED flashes: signal between 1 x switching point and 2 x switching point 3. LED off: signal < switching point
Electrical specifications		
Operating voltage	U_B	Power supply via control unit
Protection class		III , IEC 61140
Conformity		
Functional safety		ISO 13849-1
Product standard		EN 61496-1 ; IEC 61496-2
Approvals and certificates		
CE conformity		CE
UKCA conformity		UKCA
UL approval		cULus Listed
TÜV approval		TÜV SÜD
Ambient conditions		
Ambient temperature		-20 ... 60 °C (-4 ... 140 °F)
Storage temperature		-20 ... 70 °C (-4 ... 158 °F)
Relative humidity		max. 95 %, not condensing
Shock resistance		10 g , 16 ms ; stationary applications only
Vibration resistance		1 mm , 10 ... 55 Hz ; stationary applications only
Mechanical specifications		
Degree of protection		IP67 according to EN 60529
Connection		M12 connector, 4-pin
Material		
Housing		Plastic ABS/PC , yellow
Optical face		Plastic pane
Mass		per device 70 g
Dimensions		
Height		88 mm
Width		25.8 mm
Depth		54.3 mm

Release date: 2025-03-13 Date of issue: 2025-03-13 Filename: 118439_eng.pdf

Connection

Design with connector

Receiver:

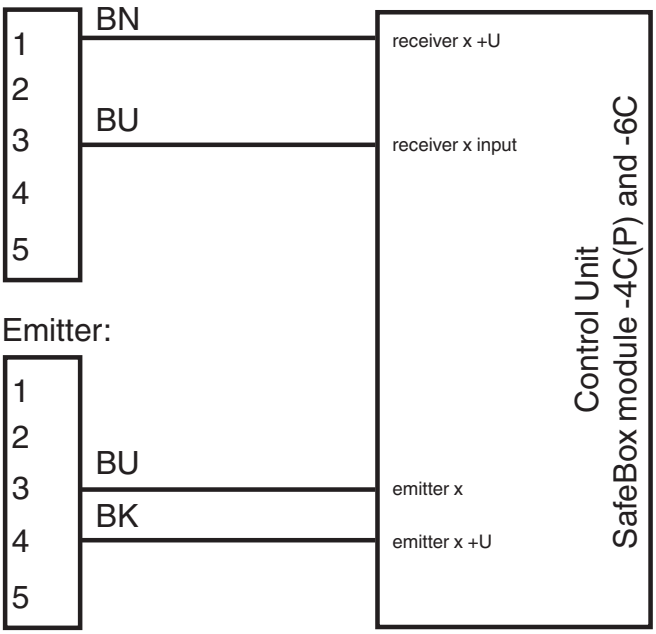

Emitter:

Connection Assignment

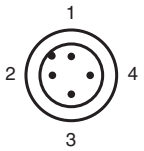

Characteristic Curve

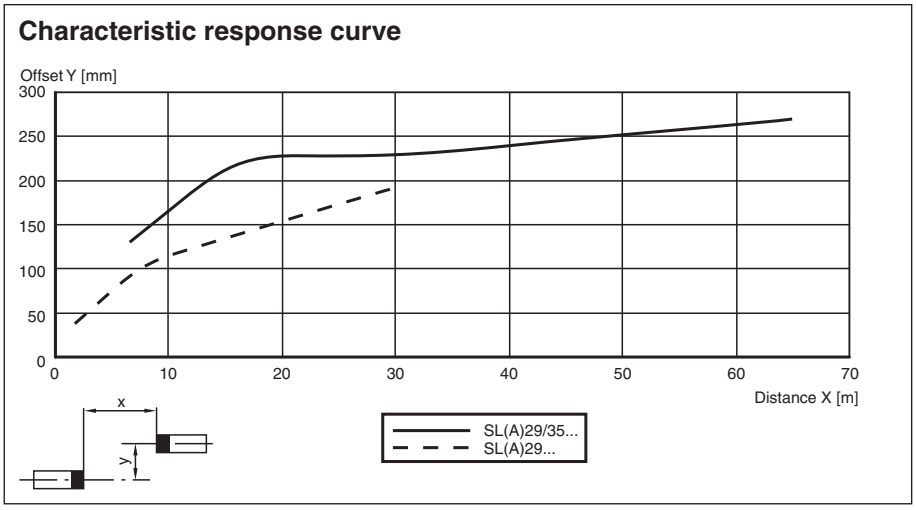

Release date: 2025-03-13 Date of issue: 2025-03-13 Filename: 118439_eng.pdf

Characteristic Curve

Relative received light strength

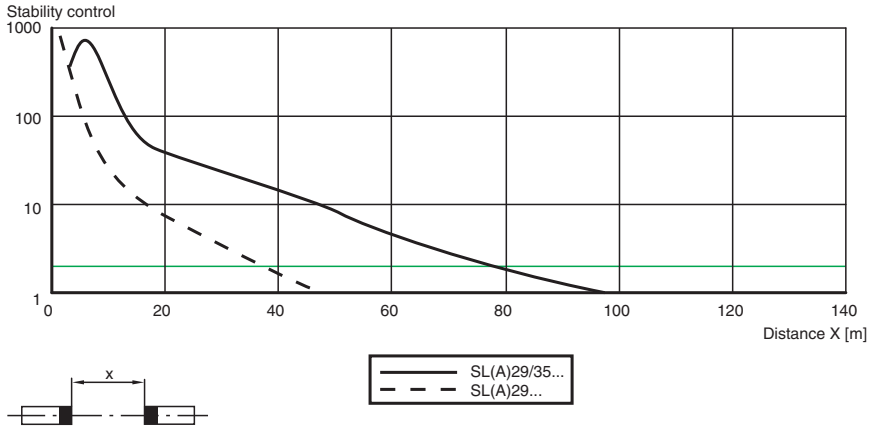

Lateral interval to mirroring surfaces

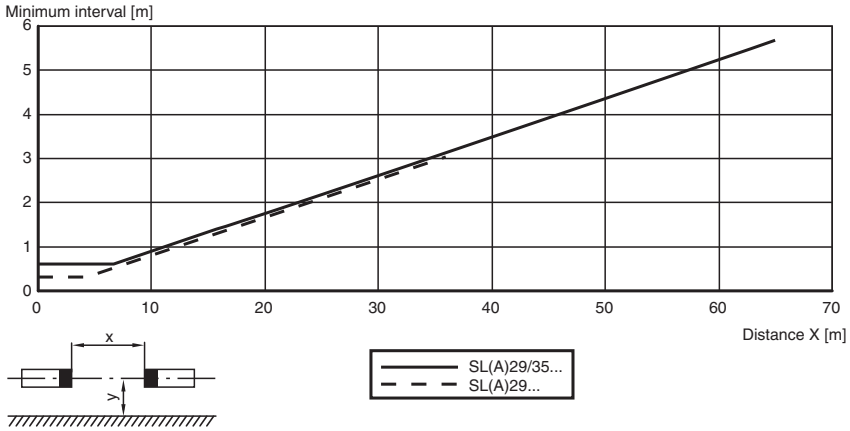

Release date: 2025-03-13 Date of issue: 2025-03-13 Filename: 118439_eng.pdf

Indication

Additional information

For much easier alignment even for lond distance applications, an additional red LED is located in the receivers optics:

- LED constantly illuminated:
  signal strength < switching level
- LED flashes:
  signal strength is between 1-fold switching level and 2-fold switching level
- LED off:
  signal strength < 2-fold switching level (function reserve)

System accessories

Control units
SC4-2
SB4 (SafeBox)
Cable sockets

Option /73c:

straight:V1-G-2M-PVC
V1-G-5M-PVC
V1-G-10M-PVC
angled:V1-W-2M-PVC
V1-W-5M-PVC
V1-W-10M-PVC

Option /105:

straight:V15-G-2M-PVC
V15-G-5M-PVC
V15-G-10M-PVC
angled:V15-W-2M-PVC
V15-W-5M-PVC
V15-W-10M-PVC

Option /116:no

Mounting aids

OMH-21
OMH-22
OMH-05
OMH-MLV11-K

Further accessories

Laser alignment aid
BA SLA28

Muting Set
MS SLP/SLA28

Redirection mirror
SLA-1-M

Release date: 2025-03-13 Date of issue: 2025-03-13 Filename: 118439_eng.pdf